EZI/O™ 4 pt. 110 AC In/4 pt. Relay Out Module

with built-in Electromagnetic shield

	Module Specifications	
AC Input Specs	*Number of Inputs*	4
	Input Voltage Range	70-132 VAC
	AC Frequency	47-63 Hz
	Peak Voltage	180 Volt
	Input Current	0.5mA @ 110 VAC
	Maximum Input Current	0.6mA @ 132 VAC
	Input Impedance	200K
	ON Voltage Level	70 VAC
	OFF Voltage Level	40 VAC
	OFF to ON Response	< 10ms
	ON to OFF Response	< 10ms
	Status Indicators	Red LED for each input
	Commons	1 Common
	Fuse	No fuse
	Base Power Required (3.3V)	10mA for all 4 on
	Optical Isolation	2500 Volt
	Wires	1 of 14 AWG, 2 of 18 AWG, 4 of 22 AWG
Relay Output Specs	*Number of Outputs*	4
	Output Voltage Range	5-180 VDC or 20-132 VAC
	Output Type	Relay 1 Form A (SPST)
	Output Terminals Consumed	5
	Peak Voltage	180 VDC/200 VAC
	AC Frequency	47-63 Hz
	Maximum Current (resist.)	1A/point
	Maximum Leakage Current	0.5mA @ 130 VAC @ 60Hz
	ON Voltage Drop	1.5 V @ 1 Amp
	Maximum Switching Current	0.5A
	Electromagnetic Shield	2 pF between contact and shield
	Dielectric Strength	250V between contacts, 1500V between contacts and shield
	OFF to ON Response	≤1ms (typical)
	ON to OFF Response	≤1ms (typical)
	Status Indicators	Red LEDs
	Commons	1
	Base Power Required (3.3V)	25mA

For EZ-LINK cables and Terminal boards look at page 4-5

Delivery Code STK

EZIOP-4ACI4RLO Screw-down

Pinout Information	
Pin No.	EZIO-4ACI4RLO
1	Input(1)
2	Input(2)
3	Input(3)
4	Input(4)
5	Customer_COM (GND)
6	Output(1)_Normally open
7	Output(2)_Normally open
8	Output(3)_Normally open
9	Output(4)_Normally open
10	Customer_COM (GND)
11	Not Connected
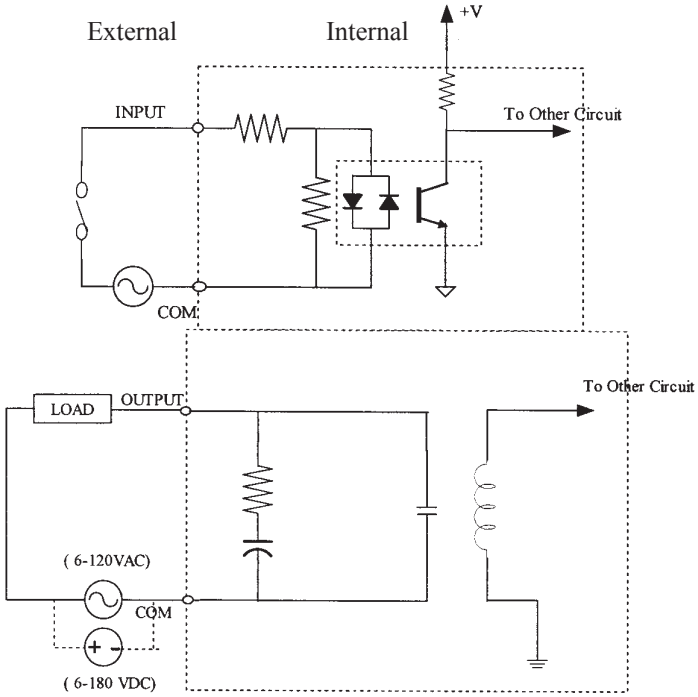
Terminal Block 300 Volt/10 Amp/14AWG UL Rating