EZI/O™ Resistance Temperature Detector

Pinout Information	
1	CHAN1 +
2	CHAN1 -
2	RTD_COMMON
4	CHAN2 +
5	CHAN2 -
6	RTD_COMMON
7	CHAN3 +
8	CHAN3 -
9	RTD_COMMON
10	CHAN4 +
11	CHAN4 -

EZIOP-RTD Screw-down

RTD Input Specifications	
Number of Channels	4
Common Mode Range	0-3.3 VDC
Coverter Type	12-bit
Update Rate	All Channels per scan
Input Words Required	4 IR Words
Temperature Drift	50 ppm / °C (max)
Maximum Inaccuracy	+ / - 3 °C
RTD Excitation Current	500 uA
Operating Temperature	0 °C to 60 °C
Storage Temperature	-20 °C to 70 °C
Relative Humidity	5 to 95 %
Terminal Block	300 Volt/10 Amp/ 14 AWG UL Rating
Optical Isolation	2500 Volt

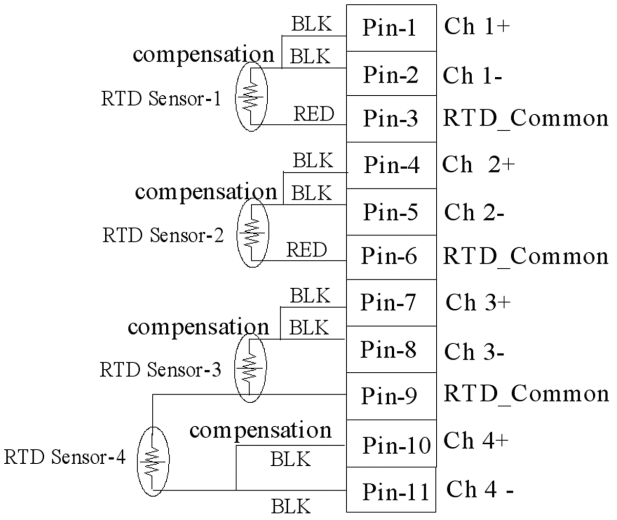

RTD Input Ranges			
RTD Input Ranges	Temperature Coefficient of Resistance (TCR) (Ω/Ω°C)	Temperature Ranges	Resolution
Pt100	0.00385	-200 °C to + 850 °C	0.29
120 Ni	0.00672	-80 °C to 260 °C	0.22
10 Cu	0.00427	-200 °C to 260 °C	2.64

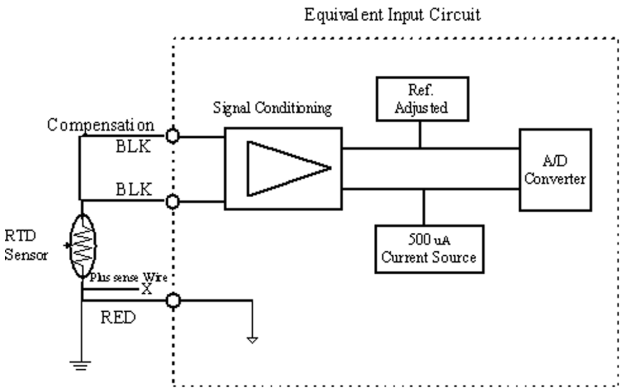

For EZ-LINK cables and Terminal boards look at page 4-5